P.A. – S.p.A. – EQUIPAGGIAMENTI TECNICI DEL LAVAGGIO
VIA MILANO, 13 – CASELLA POSTALE 115 – 42048 RUBIERA (REGGIO EMILIA) – ITALY
Tel. +39 0522 623611 – Fax. +39 0522 629600 – R.E.A. RE 156319 – R.I. RE11535 – Mecc. RE 013446
C.F. e P. IVA 01035950359 – Cap. Soc. i.v. € 750.000,00 – Codice Identificativo C.E.E. IT 01035950359
ART. 2497 – BIS C.C. DIREZIONE E COORDINAMENTO BENETTI srl R.I. TRIB. DI RE 01480690351
Web: http://www.pa-etl.it – **E-mail:** info@pa-etl.it

VS200/200 – COMPENSATED RELIEF VALVE

Technical manual: E 216

Compensated pressure regulating valve.
Regulates the bypass of the fluid with a minimum variation of the pressure.
Suitable to be utilized as a relief valve.

DN 20

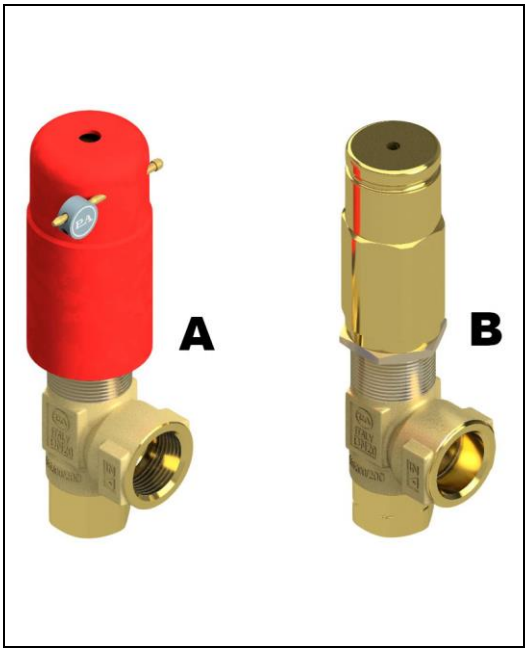

- **60.5100.15** VS200/200 G3/4 F (type B)
- **60.5100.00** VS200/200 3/4NPT F (type B)
- **60.5115.00** VS200/200 G3/4 F (type A)
  (Possibility to seal calibration)

- Central body and fittings in brass.
- Internal components in Sst.
- Moving parts totally protected.

AS A RELIEF VALVE

- Secure intervention discharging all the flow.
- Prompt and effective damping against pressure spikes.

TECHNICAL SPECIFICATIONS

Max.flow rate 200 l/min - Max. temperature 90°C **(1)**

Part number	Rated pressure bar - MPa	Permissible pressure bar - MPa	Minimum adjustable pressure bar - MPa	(3) Pressure increase as a VS bar - MPa	Inlet	Bypass	Weight g
60.5100.15	200 - 20	220 - 22	40 – 4.0	20 – 2.0	G3/4 F	G1/2 F	820
60.5100.00	200 - 20	220 - 22	40 – 4.0	20 – 2.0	3/4NPT F	1/2NPT F	820
60.5115.00	200 - 20	220 - 22	40 – 4.0	20 – 2.0	G3/4 F	G1/2 F	820

(1) The valve has been designed for a continuous use at a water temperature of 60°C. It can resist for short periods at a maximum temperature of 90°C.
(2) Pressure increase = is the increase of pressure needed into the valve for discharging the max. flow when utilized at rated pressure

Instruction manual, maintenance, installation, spare parts. For a correct utilization, follow the directions of this manual **Re-print them on the use and maintenance booklet of the machine.**	n. 12.9216.00

DIMENSIONAL DRAWING

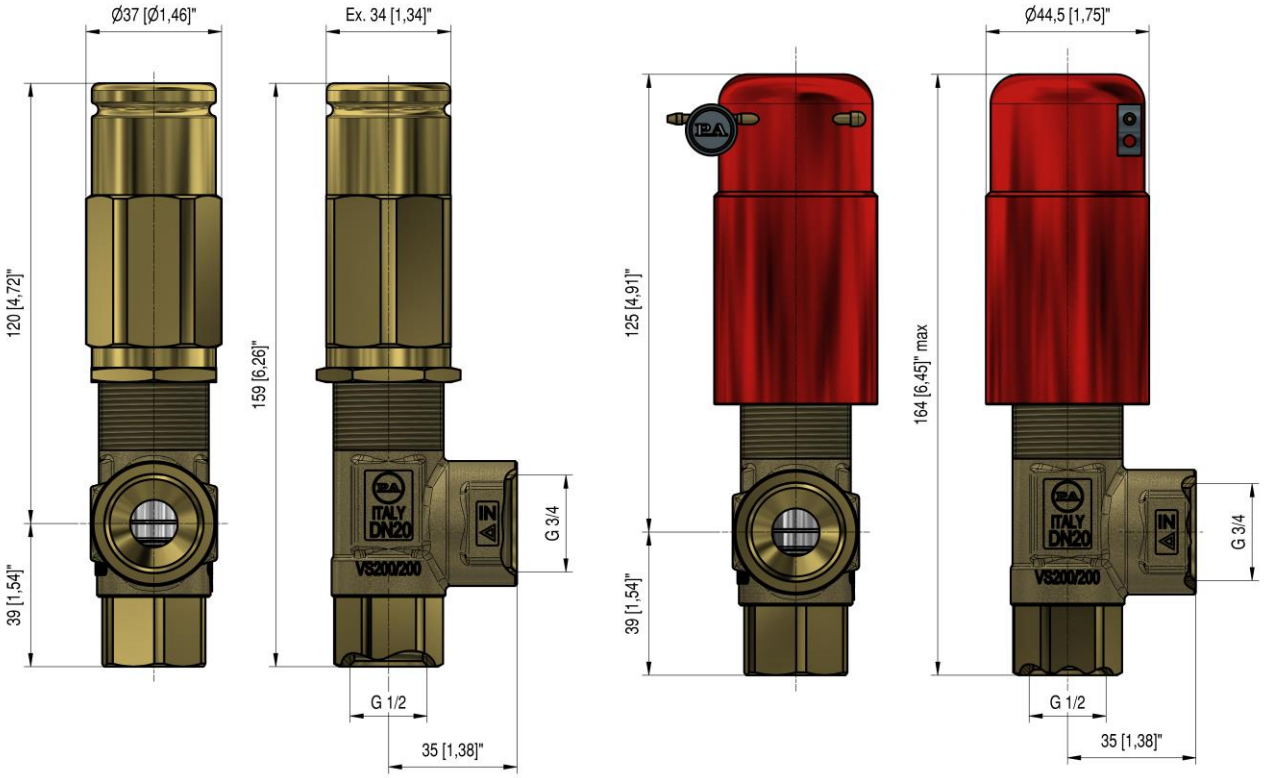

INSTRUCTIONS

SELECTION

This product is to be utilized with clean fresh water, even slightly additivated with normal detergents. For use involving different or corrosive liquids, contact the PA Technical department. Choose the valve in line with the data of nominal running (system rated pressure, max flow and max temperature). In any case, the pressure of the machine should not exceed the permissible pressure rate imprimed on the valve. When in use as pressure regulator, adopt a nozzle that allows a bypass of at least 5% of the total flow, bearing in mind that a worn-out nozzle causes pressure loss. The valve, assembled in line with these indications, avoids pressure spikes whilst the machine is in operation.

INSTALLATION

This accessory, on a system that produces hot water, must be fitted **upstream of the heat generator**.
As a RELIEF VALVE: in the case when frequently combined with unloader valves and low pressure in the pump, it has to be fitted in the section that remains pressurized when the gun is shut off.
As a PRESSURE REGULATOR: maintains the pressure in the system steady during flow changes. **Always** install in combination with a suitable Relief valve. In case of discharge in the tank or directly into the pump, it is necessary to provide devices capable to prevent damaging turbulence to the liquid flow.

OPERATIONS

The valve inlet is on the side, the discharge is opposite the adjustment knob (pos 12). The discharge should be returned to a baffled tank. If, on the contrary, the pump is fed directly from the water mains, it is advisable to install a pressure reducing valve, before the pump, to avoid dangerous pressure spikes which could badly damage manifolds and suction valves. In case of extended conditions of bypass directed to the suction side of the pump, it is recommended to install a thermal valve (VT3 or VT6) to avoid dangerous water temperature build-up.

PRESSURE ADJUSTMENT/SETTING

As a RELIEF VALVE: the adjustment has to be made in such a way that the pressure setting is not superior to the system working pressure and its accessories; this prevents the arising of numerous pressures increases in hot water systems and static pressure (gun shut off).

As a PRESSURE REGULATOR: adjust the valve when the system is pressurized and the gun open. The operation will be easy and smooth if the proper nozzle is chosen. When rotating the adjustment knob, it has to correspond to a consequent pressure increase; should the pressure stop increasing before reaching the desired value, **do not insist**, but check the correct nozzle size in relation to flow and pressure. On reaching the desired pressure, tighten the nut (pos 5) against the knob (pos 12) touching them with a drop of paint in order to emphasize any tampering or slackness.
Caution: this valve is a pressure relief valve and it is not intended to be used as a pressure regulator.
A premature and uncontrolled wearing of the internal parts could occur if used as a pressure regulator.
PA recommends the use of specifically designed unloader valves or pressure regulating valves.
It is recommended to apply a high-pressure hose to the by-pass port to prevent that the operator can be hurt by the dangerous discharge flow. The high-pressure hose should be suitable for the rated pressure of the valve.
Caution: when working with high flow rates, dangerous pressures spikes could occur in case of nozzle clogging.

HOW TO LOCK THE CALIBRATION (ONLY FOR VALVE CODE 60.5115.00 – VS200/200)
The exhaust valve is calibrated on-site at the customer's facility to the calibration pressure requested by the user.
The calibration can be locked by applying the valve cap (item 13), inserting the locking pin (item 14) into the appropriate hole in the cap, and finally applying a seal with the lead seal code: 13.1214.03R, fitting and deforming it onto the pin.
PLEASE NOTE: the lead seal code: 13.1214.03R is not supplied with the valve (60.5115.00) and must be purchased separately.

PROBLEMS AND SOLUTIONS

PROBLEMS	PROBABLE CAUSES	SOLUTIONS
Valve cycles	- Air inside the system - Worn out seals - Clogged circuit	- Flush out - Replace - Clean or widen passages
The valve does not reach pressure	- Unproper nozzle size - Seat/shutter/ball worn out - Damaged nozzle - Impurities	- Modify - Replace - Replace - Clean
Pressure drop	- Worn out nozzle - Pump gaskets worn out - Valve seat worn out - Air inside the system	- Replace - Replace - Replace - Flush out
Pressure spikes	- There is not a min.5% of total flow in by-pass - Clogged nozzle	- Re-adjust - Clean - Repeat adjustment and replace nozzle
Water leakage from bypass Valve pounding	- O-ring seat damaged - Damaged seat - Impurities or worn out valve pumps	- Replace - Replace - Clean - Replace

REGULATIONS: see norm manual
For a correct utilization, follow the directions described in this manual and re-print them on the Use and maintenace manual of the machine.
Make sure that you are given **the Original Conformity Declaration** for the accessory chosen. The present manual is valid for all unloader valves named **VS200-VS200.**

MAINTENANCE
In normal working conditions the relief valve should not open (no water discharge); if the valve is fitted on the pump head, it is in any case submitted to pressure cycles which have to be calculated for maintenance.

STANDARD: every 400 working hours (approximately 10000 working cycles of the system), check and lubricate the seals with water resistant grease.
SPECIAL: every 800 working hours (approximately 20000 working cycles of the system), control the wear of the seals and internal parts and, if necessary, replace with original PA parts taking care, during installation, to lubricate with water resistant grease.
Ffurthermore verify the absence of scale or dirt on the seat and the shutter.

ATTENTION: reassemble the valve in the correct manner paying special attention how to set the valve as described in the paragraph PRESSURE ADJUSTMENT/SETTING**.**

Maintenance has to be carried out by Specialized Technicians.

The manufacturer is not to be considered responsible for damage as a result from incorrect fitting and maintenance
Technical data, descriptions and illustrations are indicative and liable to modification without notice

60.5100.00 VS200/200 saf.val. 3/4F Npt byp:1/2F
60.5100.15 VS200/200 saf.val. 3/4F Bsp byp:1/2F

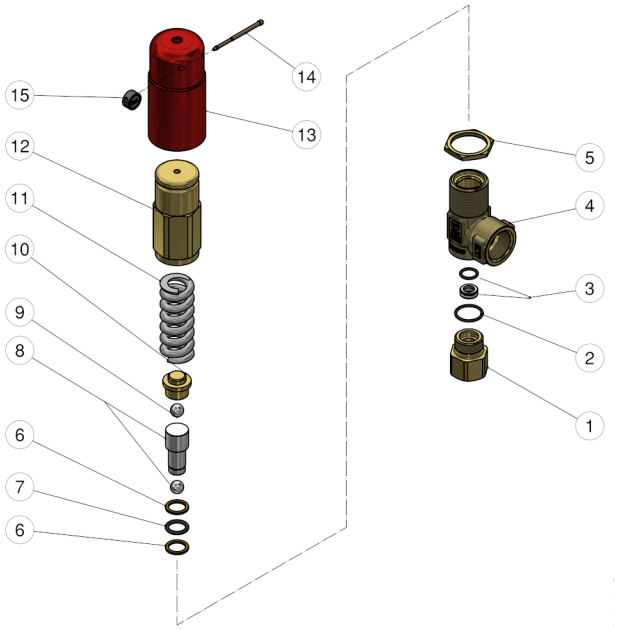

60.5115.00 VS200/200 Saf.val. 3/4F-1/2F Bsp to block

Pos.	P/N	Description	Q.ty	K1	K2	K3	K4	
1	60.5104.31R	Coupling, 1/2F Npt brass (1)	1					3
1	60.5111.31R	Seat holder, 1/2F Bsp brass (2,3)	1					3
2	10.3070.02R	O-ring, 1,78x18,77 mm Ni 85	1	•				10
3	60.0259.20R	Seat, 8mm + O-ring, 1,78mm	1	•				10
4	60.5101.35R	Housing -VS200/180, 3/4F Npt brass (1)	1					3
4	60.5109.35R	Housing -VS200/180, 3/4F Bsp brass (2,3)	1					3
5	60.5107.31R	Ring nut, M30 brass	1					10
6	10.4050.00R	Back-up ring, 13,5x18x1,5 mm	2	•				10
7	10.3178.00R	O-ring, 2,62x13,1 mm	1	•				10
8	60.5108.21R	Piston, Sst. + ball, 13/32" Sst.	1	•				5
9	14.7461.00R	Ball, 13/32" Sst.	1					10
10	60.5105.31R	Spring guide spacer, brass	1					3
11	60.5102.61R	Spring, 6x26,5x67 mm z.pl.	1					3
12	60.5106.31R	Valve regulating ring nut, brass	1					3
13	60.5117.41R	Knob x block. press al-red (3)	1					3
14	60.5114.31R	4 mm brass pin (3)	1					5
15	13.1214.03R	14 mm lead seal (3) **	1					5

** On request

Kit	P/N	Description	
K1	60.5110.24	Spares kit -VS200/180, 6x1pcs.	1

(1) 60.5100.00 (2) 60.5100.15 (3) 60.5115.00